SOAN PAPDi

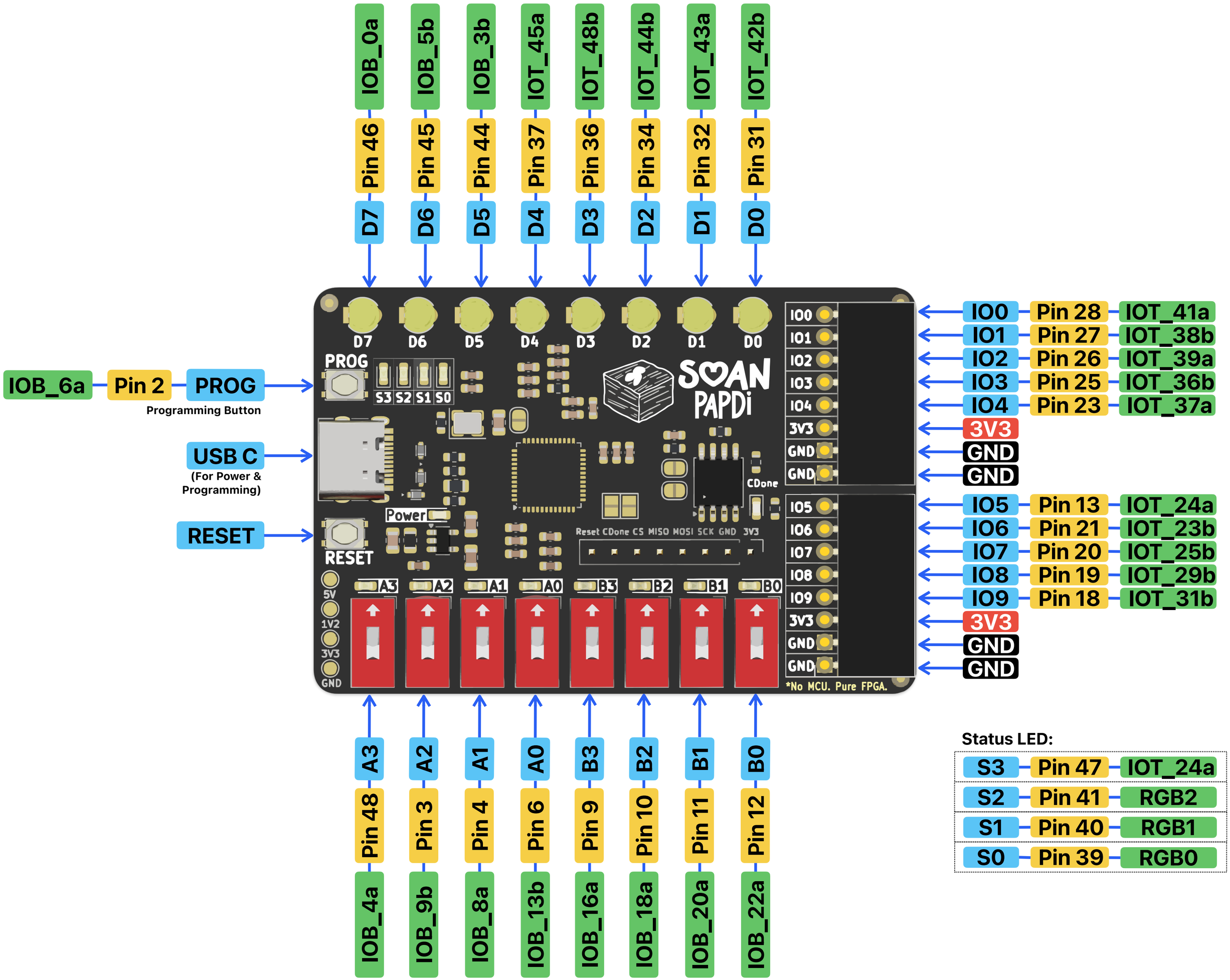
IOB_0a
IOB_5b
IOB_3b
IOT_45a
IOT_48b
IOT_44b
IOT_43a
IOT_42b
Pin 46
Pin 45
Pin 44
Pin 37
Pin 36
Pin 34
Pin 32
Pin 31
D7
D6
D5
D4
D3
D2
D1
D0
IOB_6a
Pin 2
PROG
Programming Button
USB C
(For Power & Programming)
RESET
PROG
S3 S2 S1 S0
Power
RESET
CDone
Reset CDone CS MISO MOSI SCK GND 3V3
5V
1V2
3V3
GND
A3
A2
A1
A0
B3
B2
B1
B0
IO0
IO1
IO2
IO3
IO4
3V3
GND
GND
IO5
IO6
IO7
IO8
IO9
3V3
GND
GND
*No MCU. Pure FPGA.
IO0 Pin 28 IOT_41a
IO1 Pin 27 IOT_38b
IO2 Pin 26 IOT_39a
IO3 Pin 25 IOT_36b
IO4 Pin 23 IOT_37a
3V3
GND
GND
IO5 Pin 13 IOT_24a
IO6 Pin 21 IOT_23b
IO7 Pin 20 IOT_25b
IO8 Pin 19 IOT_29b
IO9 Pin 18 IOT_31b
3V3
GND
GND
A3 Pin 48 IOB_4a
A2 Pin 3 IOB_9b
A1 Pin 4 IOB_8a
A0 Pin 6 IOB_13b
B3 Pin 9 IOB_16a
B2 Pin 10 IOB_18a
B1 Pin 11 IOB_20a
B0 Pin 12 IOB_22a
Status LED:
S3 Pin 47 IOT_24a
S2 Pin 41 RGB2
S1 Pin 40 RGB1
S0 Pin 39 RGB0